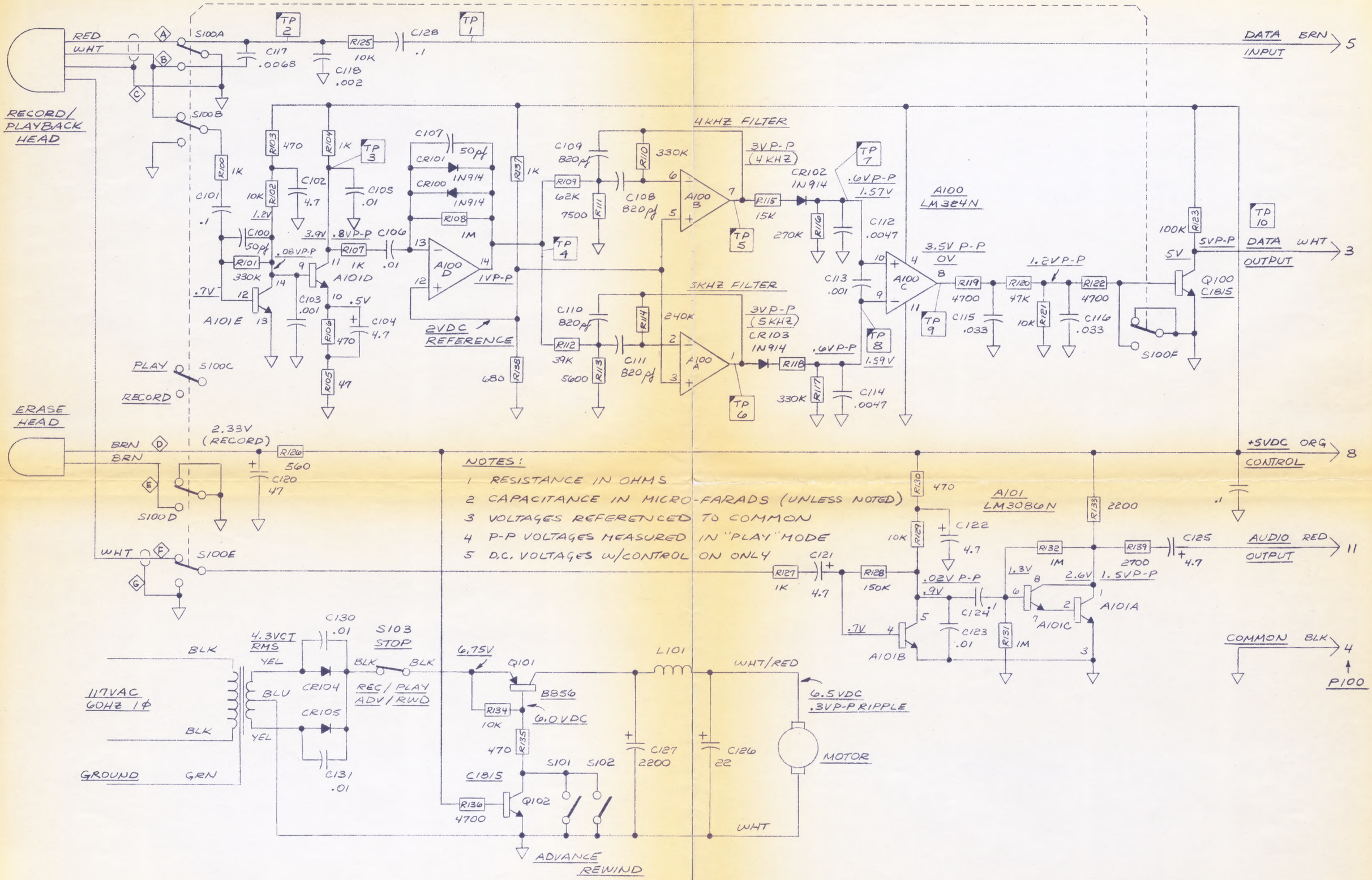

NOTES:

1 RESISTANCE IN OHMS
2 CAPACITANCE IN MICRO-FARADS (UNLESS NOTED)
3 VOLTAGES REFERENCED TO COMMON
4 P-P VOLTAGES MEASURED IN "PLAY" MODE
5 D.C. VOLTAGES W/CONTROL ON ONLY

SKEMATIKS

SCALE: /	APPROVED BY:	DRAWN BY [signature]
DATE: 9-83		REVISED

ATARI 410 SCHEMATIC DIAGRAM

DRAWING NUMBER 7S-AT410-3

COPYRIGHT © SKEMATIKS 1983